STIHL

STIHL FS 56

Instruction Manual

Contents

Guide to Using this Manual	2
Safety Precautions and Working Techniques	2
Approved Combinations of Cutting Attachment, Deflector, Handle and Harness	11
Mounting the Bike Handle	12
Mounting the Loop Handle	14
Fitting the Carrying Ring	15
Mounting the Deflector	16
Mounting the Cutting Attachment	16
Fuel	19
Fueling	20
Fitting the Harness	21
Balancing the Machine	21
Starting / Stopping the Engine	22
Transporting the Unit	25
Operating Instructions	25
Cleaning the Air Filter	26
Adjusting the Carburetor	26
Spark Plug	27
Engine Running Behavior	28
Storing the Machine	28
Sharpening Metal Cutting Blades	28
Maintaining the Mowing Head	29
Maintenance and Care	31
Minimize Wear and Avoid Damage	33
Main Parts	34
Specifications	35
Maintenance and Repairs	36
Disposal	37
EC Declaration of Conformity	37

Dear Customer,

Thank you for choosing a quality engineered STIHL product.

It has been built using modern production techniques and comprehensive quality assurance. Every effort has been made to ensure your satisfaction and trouble-free use of the product.

Please contact your dealer or our sales company if you have any queries concerning this product.

Your

Dr. Nikolas Stihl

Original Instruction Manual

Printed on chlorine-free paper
Printing inks contain vegetable oils, paper can be recycled.

© ANDREAS STIHL AG & Co. KG, 2020
0458-547-0121-D. VA8.D20.
0000000931_028_GB

STIHL

This instruction manual is protected by copyright. All rights reserved, especially the rights to reproduce, translate and process with electronic systems.

Guide to Using this Manual

Pictograms

The meanings of the pictograms attached to the machine are explained in this manual.

Depending on the model concerned, the following pictograms may be attached to your machine.

Fuel tank; fuel mixture of gasoline and engine oil

Operate decompression valve

Manual fuel pump

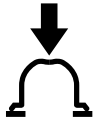
Operate manual fuel pump

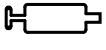
Tube of grease

Intake air: Summer operation

Intake air: Winter operation

Handle heating

Symbols in text

WARNING

Warning where there is a risk of an accident or personal injury or serious damage to property.

NOTICE

Caution where there is a risk of damaging the machine or its individual components.

Engineering improvements

STIHL's philosophy is to continually improve all of its products. For this reason we may modify the design, engineering and appearance of our products periodically.

Therefore, some changes, modifications and improvements may not be covered in this manual.

Safety Precautions and Working Techniques

Some special safety precautions have to be observed when working with this power tool because of the very high speed of the cutting attachment.

It is important that you read the instruction manual before first use and keep it in a safe place for future reference. Non-observance of the instruction manual may result in serious or even fatal injury.

Observe all applicable local safety regulations, standards and ordinances.

If you have not used this type of power tool before: Have your dealer or other experienced user show you how it is operated or attend a special course in its operation.

Minors should never be allowed to use a power tool.

Keep bystanders, especially children, and animals away from the work area.

When the power tool is not in use, shut it off so that it does not endanger others. Secure it against unauthorized use.

The user is responsible for avoiding injury to third parties or damage to their property.

Do not lend or rent your power tool without the instruction manual. Be sure that anyone using it understands the information contained in this manual.

The use of noise emitting power tools may be restricted to certain times by national or local regulations.

To operate the power tool you must be rested, in good physical condition and mental health.

If you have any condition that might be aggravated by strenuous work, check with your doctor before operating a power tool.

Persons with pacemakers only: The ignition system of your power tool produces an electromagnetic field of a very low intensity. This field may interfere with some pacemakers. STIHL recommends that persons with pacemakers consult their physician and the pacemaker manufacturer to reduce any health risk.

Do not operate the power tool if you are under the influence of any substance (drugs, alcohol) which might impair vision, dexterity or judgment.

Depending on the cutting attachment fitted, use your power tool only for cutting grass, wild growth, shrubs, scrub, bushes, small diameter trees and similar materials.

Do not use your power tool for any other purpose because of the **increased risk of accidents**.

Only use cutting attachments and accessories that are explicitly approved for this power tool model by STIHL or are technically identical. If you have any questions in this respect, consult a servicing dealer. Use only high quality tools and accessories in order to avoid the risk of accidents and damage to the machine.

STIHL recommends the use of genuine STIHL tools and accessories. They are specifically designed to match the product and meet your performance requirements.

Never attempt to modify your machine in any way since this may increase the risk of personal injury. STIHL excludes all liability for personal injury and damage to property caused while using unauthorized attachments.

The deflector on this power tool cannot protect the operator from all objects thrown by the cutting attachment (stones, glass, wire, etc.). Such objects may ricochet and then hit the operator.

Do not use a pressure washer to clean your power tool. The solid jet of water may damage parts of the power tool.

Clothing and Equipment

Wear proper protective clothing and equipment.

Clothing must be sturdy but allow complete freedom of movement. Wear snug-fitting clothing, an overall and jacket combination, do not wear a work coat.

Avoid clothing that could get caught on branches or brush or moving parts of the machine. Do not wear a scarf, necktie or jewelry. Tie up long hair so that it is above shoulder level.

Wear steel-toed safety boots with non-slip soles.

Sturdy shoes with non-slip soles may be worn as an alternative only when using mowing heads.

WARNING

To reduce the risk of eye injuries, wear close-fitting safety glasses in accordance with European Standard EN 166. Make sure the safety glasses are a comfortable and snug fit.

Wear a face shield and make sure it is a good fit. A face shield alone does not provide adequate eye protection.

Wear hearing protection, e.g. earplugs or ear muffs.

Wear a safety hard hat for thinning operations, when working in high scrub and where there is a danger of head injuries from falling objects.

Wear heavy-duty work gloves made of durable material (e.g. leather).

STIHL offers a comprehensive range of personal protective clothing and equipment.

Transporting the Power Tool

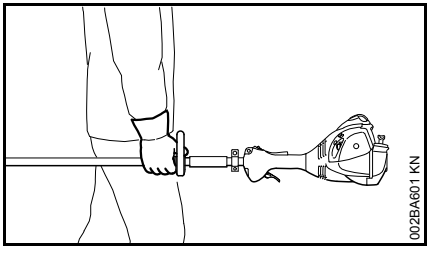

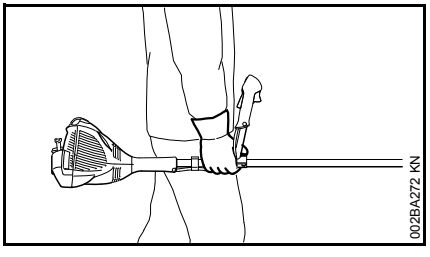

Always shut off the engine.

Carry the unit hanging from the shoulder strap or properly balanced by the drive tube.

To reduce the risk of cut injuries, fit transport guard on the cutting attachment, even when carrying the tool for short distances – see also "Mounting the Transport Guard".

To reduce the risk of serious burn injuries, avoid touching hot parts of the machine, including the gearbox.

Transporting by vehicle: Properly secure your power tool to prevent turnover, fuel spillage and damage.

Fueling

Gasoline is an extremely flammable fuel. Keep clear of naked flames. Do not spill any fuel – do not smoke.

Always shut off the engine before refueling.

Do not fuel a hot engine – fuel may spill and **cause a fire**.

Open the fuel cap carefully to allow any pressure build-up in the tank to release slowly and avoid fuel spillage.

Fuel your power tool only in well-ventilated areas. If you spill fuel, wipe the machine immediately – if fuel gets on your clothing, change immediately.

After fueling, tighten down the fuel tank cap as securely as possible.

This reduces the risk of unit vibrations causing the fuel cap to loosen or come off and spill quantities of fuel.

To reduce the risk of serious or fatal burn injuries, check for fuel leakage. If fuel leak is found, do not start the engine.

Before Starting

Check that your power tool is properly assembled and in good condition – refer to appropriate chapters in the instruction manual.

- Check the fuel system for leaks, paying special attention to visible parts such as the tank cap, hose connections and the manual fuel pump (on machines so equipped). If there are any leaks or damage, do not start the engine – **risk of fire**. Have your machine repaired by a servicing dealer before using it again.
- Use only an approved combination of cutting attachment, deflector, handle and harness. All parts must be assembled properly and securely.
- The stop switch / slide control must move freely.
- Check smooth action of choke knob, throttle trigger lockout and throttle trigger – the throttle trigger must return automatically to the idle position. The choke knob must spring back from the ⅄ and ⅄ positions to the run position I when the throttle trigger lockout and throttle trigger are squeezed.
- Check that the spark plug boot is secure – a loose boot may cause arcing that could ignite combustible fumes **and cause a fire**.
- Check cutting tool or attachment for correct and secure assembly and good condition.

- Check protective devices (e.g. deflector for cutting attachment, rider plate) for damage or wear. Always replace damaged parts. Do not operate your machine with a damaged deflector or worn rider plate (lettering and arrows no longer legible).
- Never attempt to modify the controls or safety devices in any way.
- Keep the handles dry and clean – free from oil and dirt – for safe control of the power tool.
- Adjust the harness and handle(s) to suit your height and reach. See chapters on "Fitting the Harness" and "Balancing the Machine".

To reduce the risk of accidents, operate your power tool only if it is in a safe condition.

If you use a shoulder strap or full harness: Practice removing and putting down the machine as you would in an emergency. To avoid damage, do not throw the machine to the ground when practicing.

Starting the Engine

Start the engine at least 3 meters from the fueling spot, outdoors only.

Place the unit on firm ground in an open area. Make sure you have good balance and secure footing. Hold the unit securely. The cutting attachment must be clear of the ground and all other obstructions because it may begin to run when the engine starts.

Your power tool is a one-person unit. **To reduce the risk of injury** from thrown objects, do not allow other persons within a radius of 15 meters of your own position – even when starting.

To reduce the risk of injury, avoid contact with the cutting attachment.

Do not drop start the power tool – start the engine as described in the instruction manual. Note that the cutting attachment continues to run for a short period after you let go of the throttle trigger – **flywheel effect.**

Check idle speed setting: The cutting attachment must not rotate when the engine is idling with the throttle trigger released.

To reduce the risk of fire, keep hot exhaust gases and hot muffler away from easily combustible materials (e.g. wood chips, bark, dry grass, fuel).

Holding and Controlling the Power Tool

Always hold the power tool firmly with both hands on the handles.

Make sure you always have good balance and secure footing.

Models with bike handle

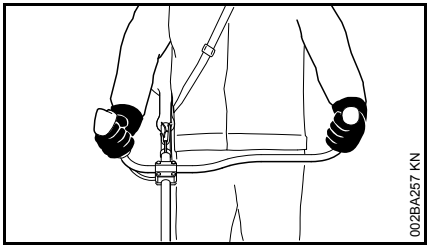

Right handle on control handle, left hand on left handle.

Models with loop handle

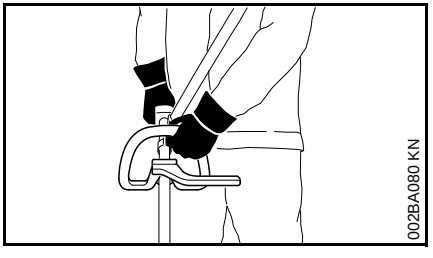

Left hand on loop handle, right hand on control handle, even if you are left-handed.

During Operation

Make sure you always have good balance and secure footing.

In the event of impending danger or in an emergency, shut off the engine immediately – move the stop switch / slide control in the direction of **0**.

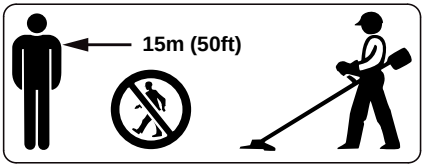

The cutting attachment may catch and fling objects a great distance and cause injury - therefore, do not allow any other persons within a radius of 15 meters of your own position. **To reduce the risk of damage to property**, also maintain this distance from other objects (vehicles, windows). Even maintaining a distance of 15 meters or more cannot exclude the potential danger.

The correct engine idle speed is important to ensure that the cutting attachment stops rotating when you let go of the throttle trigger.

Check and correct the idle speed setting regularly. If the cutting attachment continues to rotate when the engine is idling, have the machine checked by your servicing dealer. STIHL recommends an authorized STIHL servicing dealer.

Take special care in slippery conditions (ice, wet ground, snow), on slopes or uneven ground.

Watch out for obstacles: Roots and tree stumps which **could cause you to trip or stumble**.

Always stand on the ground while working, never on a ladder, work platform or any other insecure support.

Be particularly alert and cautious when wearing hearing protection because your ability to hear warnings (shouts, alarms, etc.) is restricted.

To reduce the risk of accidents, take a break in good time to avoid tiredness or exhaustion.

Work calmly and carefully – in daylight conditions and only when visibility is good. Stay alert so as not to endanger others.

Your power tool produces toxic exhaust fumes as soon as the engine is running. These fumes may be colorless and odorless and contain unburned hydrocarbons and benzene. Never run the engine indoors or in poorly ventilated locations, even if your model is equipped with a catalytic converter.

To reduce the risk of serious or fatal injury from breathing toxic fumes, ensure proper ventilation when working in trenches, hollows or other confined locations.

To reduce the risk of accidents, stop work immediately in the event of nausea, headache, visual disturbances (e.g. reduced field of vision), problems with hearing, dizziness, deterioration in ability to concentrate. Apart from other possibilities, these symptoms may be caused by an excessively high concentration of exhaust gases in the work area.

Operate your power tool so that it produces a minimum of noise and emissions – do not run the engine unnecessarily, accelerate the engine only when working.

To reduce the risk of fire, **do not smoke** while operating or standing near your power tool. Note that combustible fuel vapor may escape from the fuel system.

The dusts, vapor and smoke produced during operation may be dangerous to health. If the work area is very dusty or smoky, wear a respirator.

If your power tool is subjected to unusually high loads for which it was not designed (e.g. heavy impact or a fall), always check that it is in good condition before continuing work – see also "Before Starting".

Check the fuel system in particular for leaks and make sure the safety devices are working properly. Do not continue operating your power tool if it is damaged. In case of doubt, consult your servicing dealer.

Do not operate your power tool with the choke knob in the warm start position – the engine speed cannot be controlled in this position.

To reduce the risk of injury from thrown objects, never operate the unit without the proper deflector for the type of cutting attachment being used.

Inspect the work area: Stones, pieces of metal or other solid objects may be thrown more than 15 meters and **cause personal injury** or damage the cutting attachment and property (e.g. parked vehicles, windows).

Special care must be taken when working in difficult, over-grown terrain.

When cutting high scrub, under bushes and hedges: Keep cutting attachment at a minimum height of 15 cm to avoid harming small animals.

Always shut off the engine before leaving the machine unattended.

Check the cutting attachment at regular short intervals during operation or immediately if there is a noticeable change in cutting behavior:

- Turn off the engine. Hold the unit firmly and wait for the cutting attachment to come to a standstill.
- Check condition and tightness, look for cracks.
- Check sharpness.
- Replace damaged or dull cutting attachments immediately, even if they have only superficial cracks.

Clean grass and plant residue off the cutting attachment mounting at regular intervals – remove any build up of material from the cutting attachment and deflector.

To reduce the risk of injury, shut off the engine before changing the cutting attachment.

The gearbox gets hot during operation. **To reduce the risk of burn injury**, do not touch the gearbox housing.

When using mowing heads

Equip the deflector with the additional components specified in the instruction manual.

Use only the deflector with properly mounted line limiting blade to ensure the mowing lines are automatically trimmed to the approved length.

To reduce the risk of injury, always turn off the engine before adjusting the nylon line of manually adjustable mowing heads.

Using the trimmer with over-long nylon cutting lines reduces the engine's operating speed. The clutch then slips continuously and this causes overheating and damage to important components (e.g. clutch, polymer housing components) – **and this can increase the risk of injury** from the cutting attachment rotating while the engine is idling.

Using metal cutting attachments

STIHL recommends the use of original STIHL metal cutting attachments. They are specifically designed to match your model and meet your performance requirements.

Metal cutting attachments rotate at very high speed. The forces that occur act on the machine, the attachment and the material being cut.

Metal cutting attachments must be sharpened regularly as specified.

Unevenly sharpened metal cutting attachments cause out-of-balance which can impose extremely high loads on the machine and increase the **risk of breakage**.

Dull or improperly sharpened cutting edges can put a higher load on the cutting attachment and increase the **risk of injury** from cracked or broken parts.

Inspect metal cutting attachments for cracks or warping after every contact with hard objects (e.g. stones, rocks, pieces of metal). **To reduce the risk of injury**, remove burrs and other visible build-ups of material (use a file) because they may become detached and be thrown at high speed during operation.

If a rotating metal cutting attachment makes contact with a rock or other solid object there is a risk of sparking which may cause easily combustible material to catch fire under certain circumstances. Dry plants and scrub are also easily combustible, especially in hot and dry weather conditions. If there is a risk of fire, do not use metal cutting attachments near combustible materials, dry plants or scrub. Always contact your local forest authority for information on a possible fire risk.

Do not continue using or attempt to repair damaged or cracked cutting attachments by welding, straightening or modifying the shape (out of balance).

This may cause parts of the cutting attachment to come off and hit the operator or bystanders at high speed and **result in serious or fatal injuries**.

To reduce the above-mentioned risks when using a metal cutting attachment, never use a metal cutting attachment with a diameter larger than specified. It must not be too heavy. It must be manufactured from materials of adequate quality and its geometry must be correct (shape, thickness).

To reduce the risk of injury, a metal cutting attachment not manufactured by STIHL must not be heavier, thicker, have a different shape or a diameter larger than the largest metal cutting attachment approved by STIHL for this power tool model.

Vibrations

Prolonged use of the power tool may result in vibration-induced circulation problems in the hands (whitefinger disease).

No general recommendation can be given for the length of usage because it depends on several factors.

The period of usage is prolonged by:

- Hand protection (wearing warm gloves)
- Work breaks

The period of usage is shortened by:

- Any personal tendency to suffer from poor circulation (symptoms: frequently cold fingers, tingling sensations).
- Low outside temperatures.
- The force with which the handles are held (a tight grip restricts circulation).

Continual and regular users should monitor closely the condition of their hands and fingers. If any of the above symptoms appear (e.g. tingling sensation in fingers), seek medical advice.

Maintenance and Repairs

Service the machine regularly. Do not attempt any maintenance or repair work not described in the instruction manual. Have all other work performed by a servicing dealer.

STIHL recommends that you have servicing and repair work carried out exclusively by an authorized STIHL servicing dealer. STIHL dealers are regularly given the opportunity to attend training courses and are supplied with the necessary technical information.

Only use high-quality replacement parts in order to avoid the risk of accidents and damage to the machine. If you have any questions in this respect, consult a servicing dealer.

STIHL recommends the use of genuine STIHL replacement parts. These parts are specifically designed to match your machine model and meet your performance requirements.

To reduce **the risk of injury** from unintentional engine startup, **always shut off the engine and disconnect the spark plug boot** before performing any repairs, maintenance or cleaning work. – Exception: Carburetor and idle speed adjustments.

Do not turn the engine over on the starter with the spark plug boot or spark plug removed since there is otherwise a **risk of fire** from uncontained sparking.

To reduce the **risk of fire**, do not service or store your machine near open flames.

Check the fuel filler cap for leaks at regular intervals.

Use only a spark plug of the type approved by STIHL and make sure it is in good condition – see "Specifications".

Inspect the ignition lead (insulation in good condition, secure connection).

Check the condition of the muffler.

To reduce the **risk of fire and damage to hearing**, do not operate your machine if the muffler is damaged or missing.

Do not touch a hot muffler since **burn injury** will result.

Symbols on Deflectors

An **arrow** on the deflector shows the correct direction of rotation of the cutting attachments.

Some of the following symbols are applied to the outside of the deflector to indicate the approved combination of cutting tool and deflector.

Use deflector in combination with mowing heads only. Do not use metal cutting attachments.

Do not use deflector with brush knives or circular saw blades.

Do not use deflector with mowing heads.

Use deflector in combination with grass cutting blades only.

Shoulder strap

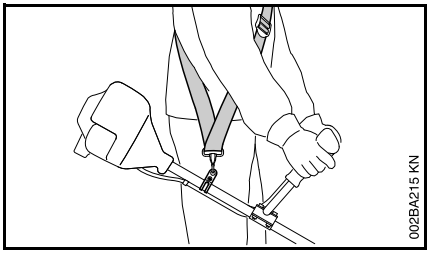

- Use a shoulder strap.
- With the engine running, attach the machine to the shoulder strap.

Grass cutting blades must always be used in combination with a shoulder strap.

Mowing Head with Nylon Line

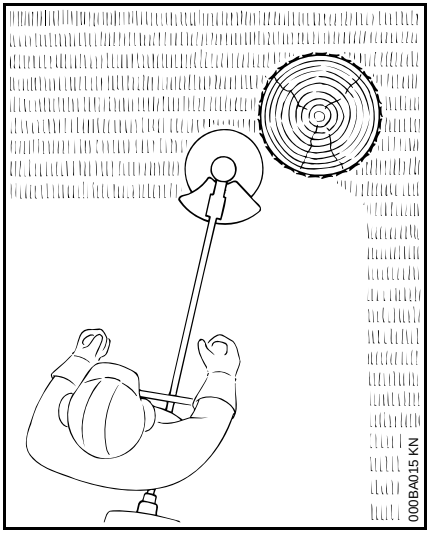

Nylon line achieves a soft cut for edging and trimming around trees, fence posts, etc. – less risk of damaging tree bark.

The mowing head comes with an instruction leaflet. Refill the mowing head with nylon line as described in the instruction leaflet.

WARNING

To reduce the risk of serious injury, never use wire or metal-reinforced line in place of the nylon line.

STIHL Polycut Mowing Head with Polymer Blades

For mowing unobstructed edges of meadows (without posts, fences, trees or similar obstacles).

Check the wear limit marks!

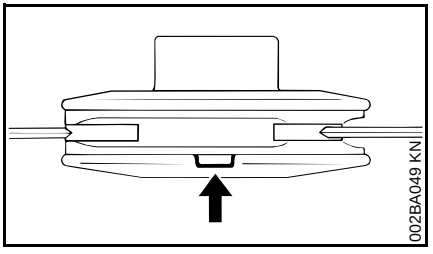

If one of the wear limit marks on the PolyCut mowing head is worn through (arrow): Do not continue using the mowing head. Install a new one. There is otherwise a **risk of injury** from thrown parts of the head.

It is important to follow the maintenance instructions for the PolyCut mowing head.

The PolyCut can also be equipped with mowing line in place of the polymer blades.

The mowing head comes with instruction leaflets. Equip the mowing head with polymers blades or nylon line as described in the instruction leaflets.

WARNING

Never use wire in place of the nylon mowing line – **risk of injury**.

Risk of Kickout (Blade Thrust) with Metal Cutting Attachments

WARNING

When using metal cutting attachments there is a risk of kickout when the rotating blade comes into contact with a solid object such as a tree trunk, branch, tree stump, rock or similar. The machine is thrown to the right or to the rear – opposite to the attachment's direction of rotation.

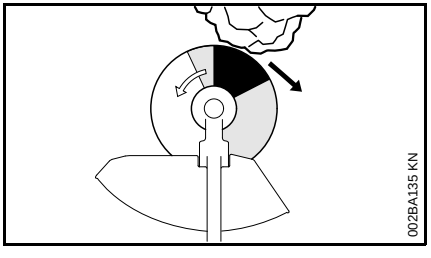

The **risk of kickout is greatest** when the **black area** of the rotating cutting attachment comes into contact with a solid object.

Grass Cutting Blade

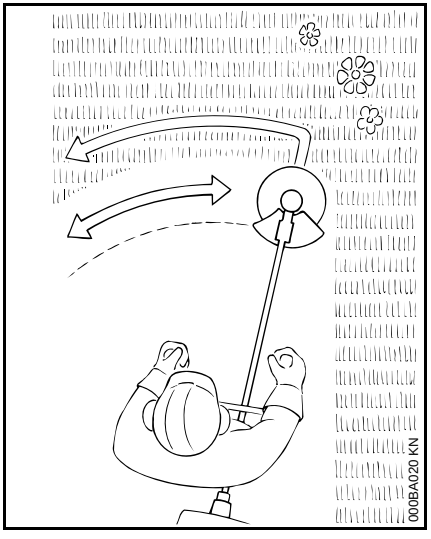

Use for grass and weeds only – sweep the brushcutter in an arc like a scythe.

WARNING

Improper use may damage the grass cutting blade – **risk of injury** from thrown parts.

Resharpen the grass cutting blade according to instructions when it has dulled noticeably.

Approved Combinations of Cutting Attachment, Deflector, Handle and Harness

Cutting Attachment	Deflector	Handle	Shoulder Strap/Harness
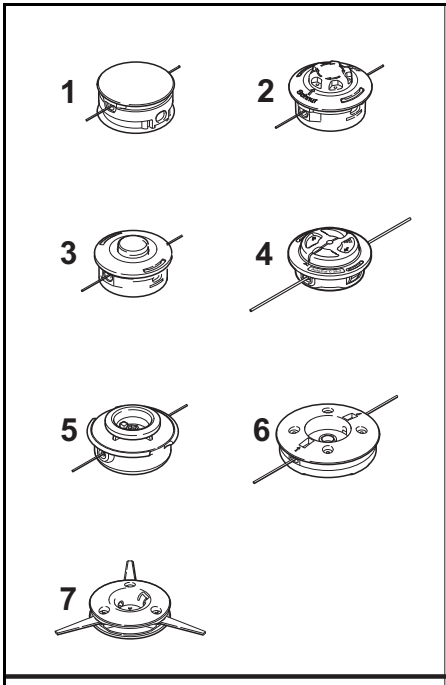	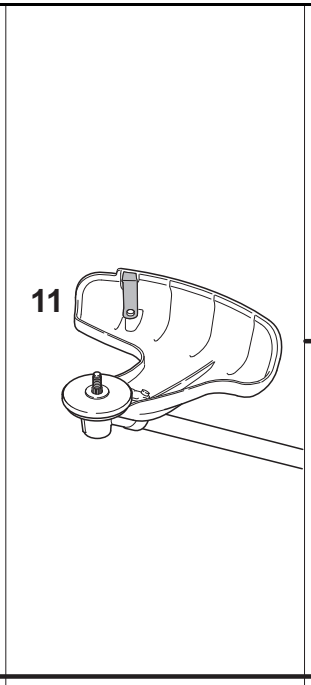	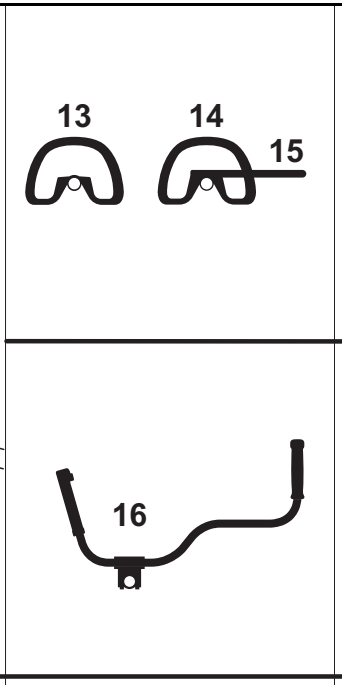	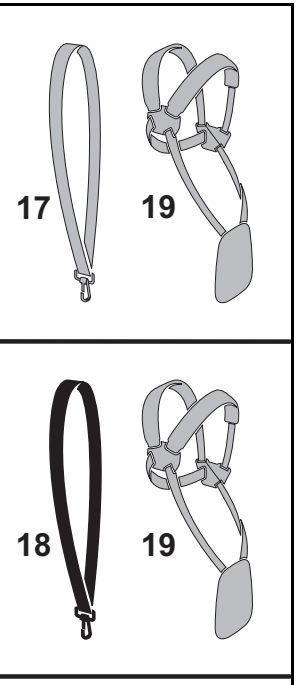
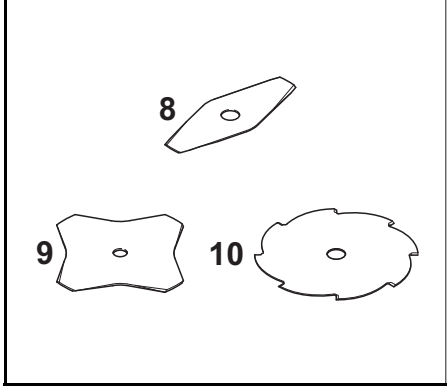	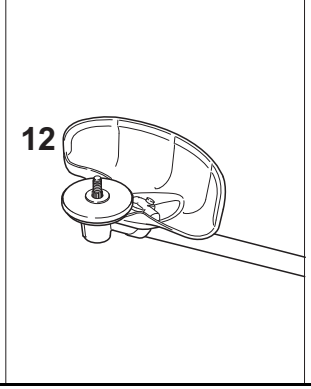	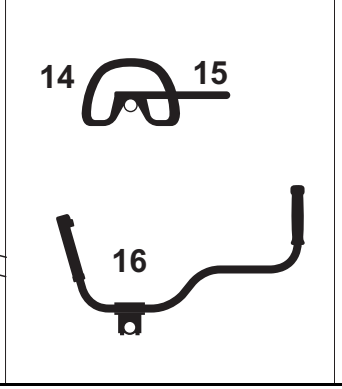	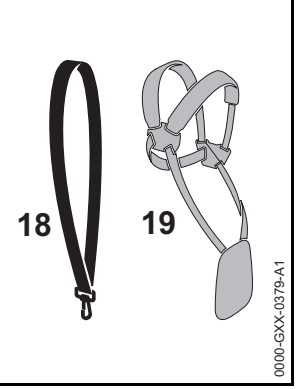

0000-GXX-0379-A1

Approved Combinations

Select correct combination from the table according to the cutting attachment you intend to use.

WARNING

For safety reasons only the cutting attachments, deflectors, handles and harnesses shown in each row of the table may be used together. No other combinations are permitted – **risk of accidents.**

Cutting Attachments

Mowing heads

1 STIHL SuperCut 20-2
2 STIHL AutoCut C 25-2
3 STIHL AutoCut 25-2
4 STIHL AutoCut C 26-2
5 STIHL TrimCut 31-2
6 STIHL DuroCut 20-2
7 STIHL PolyCut 20-3

Metal cutting attachments

8 Grass cutting blade 230-2 (230 mm dia.)
9 Grass cutting blade 230-4 (230 mm dia.)
10 Grass cutting blade 230-8 (230 mm dia.)

WARNING

Non-metal grass cutting blades are not approved.

Deflectors

11 Deflector with blade, for mowing heads
12 Deflector for metal cutting attachments

Handles

13 Loop handle
14 Loop handle with
15 Barrier bar
16 Bicycle handle

Harness

17 Shoulder strap may be used
18 Shoulder strap must be used
19 Full harness may be used

Mounting the Bike Handle

Mounting the Handlebar

Mount the handlebar on the drive tube about 10 cm (4 in) forward of the engine housing.

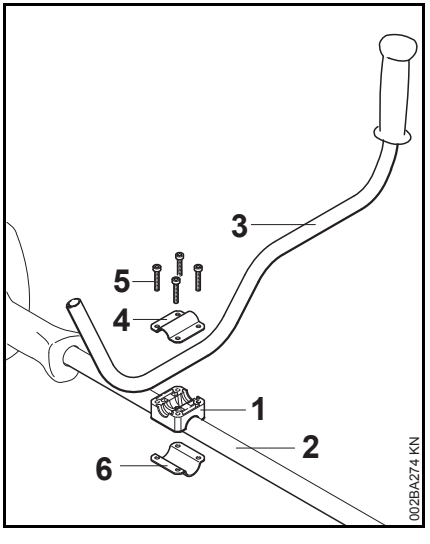

- Place the handle support (1) on the drive tube (2).
- Place the handlebar (3) in the handle support.
- Fit the clamp (4) on the handle support. Insert the screws (5) through the holes in the parts and screw them into clamp (6) as far as stop – tighten them only moderately at this stage.

Mounting the Control Handle

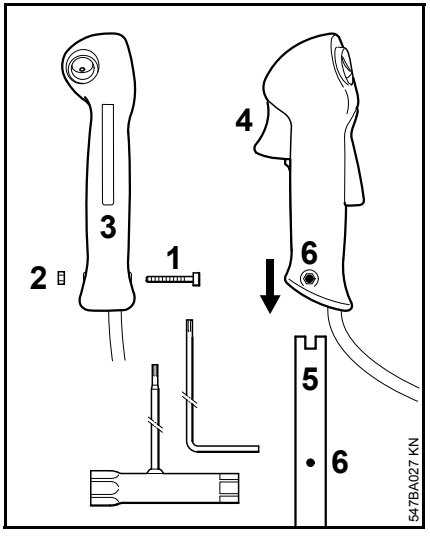

- Take out the screw (1) – the nut (2) remains in the control handle (3).
- Push the control handle onto the handlebar (5) until the holes (6) line up – the throttle trigger (4) must point towards the gearbox.
- Insert the screw (1) and tighten it down firmly.

Adjusting and securing the handlebar

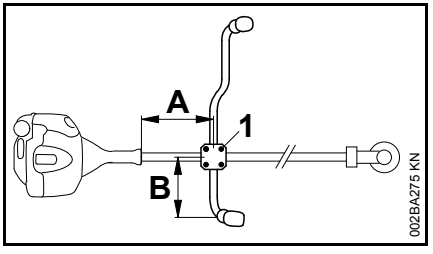

- Align the handlebar so that distance A is about 20 cm (8 in) and distance B about 15 cm (6 in).
- Tighten down the screws (1) firmly in a crosswise pattern.

Fitting the Throttle Cable

NOTICE

Do not kink the throttle cable or lay it in tight radii – make sure the throttle trigger moves freely.

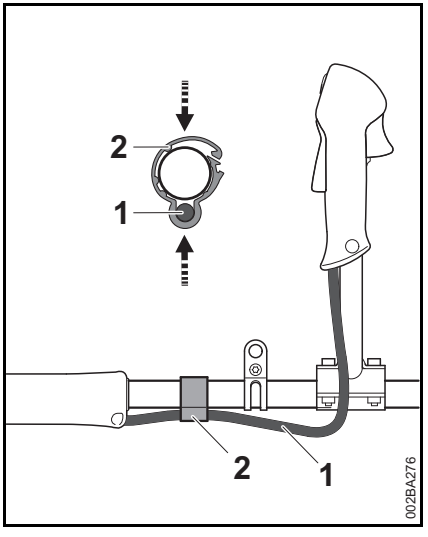

- Position the throttle cable retainer (2) and throttle cable (1) against the drive tube.
- Close the throttle cable retainer (2). The retainer (2) snaps into place.

Mounting the Loop Handle

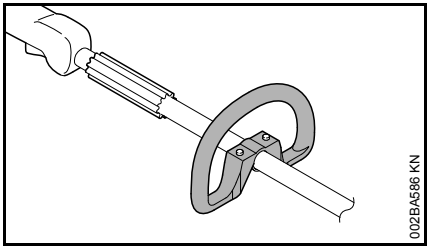

A factory-new machine comes with the loop handle already mounted.

Using the Barrier Bar

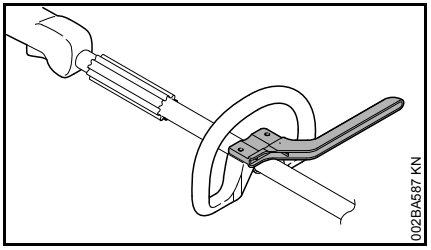

A barrier bar may have to be mounted to suit the cutting attachment you intend to use – see "Approved Combinations of Cutting Attachment, Deflector, Handle and Harness".

The barrier bar comes standard with the machine or is available as a special accessory.

Mounting the Barrier Bar

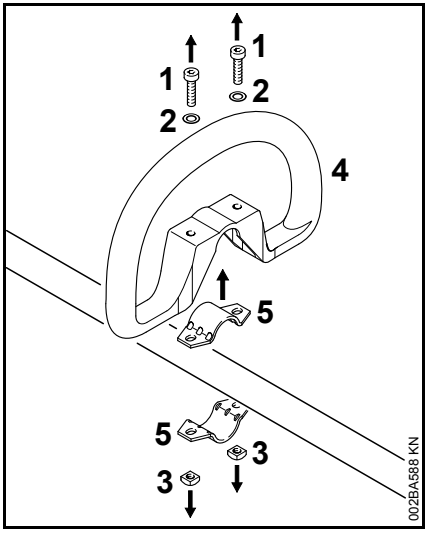

- Take out the screws (1) and remove along with washers (2) and nuts (3).
- Remove the loop handle (4) and clamps (5).

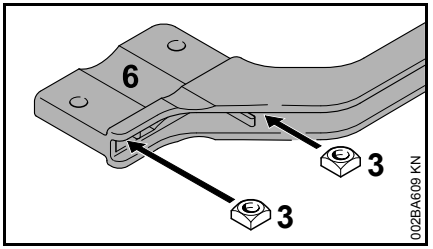

- Fit the square nuts (3) in the barrier bar (6); the holes must line up.

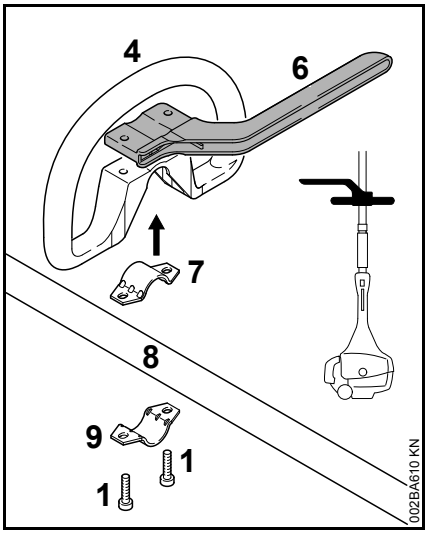

- Place the clamp (7) in the loop handle (4) and position them both against the drive tube (8).
- Position the clamp (8) against the drive tube.
- Place the barrier bar (6) in position as shown.
- Line up the holes.
- Insert the screws (1) in the holes and screw them into the barrier bar as far as stop.
- Go to "Adjusting and Securing the Loop Handle".

Leave the barrier bar permanently mounted to the loop handle.

Adjusting and Securing the Loop Handle

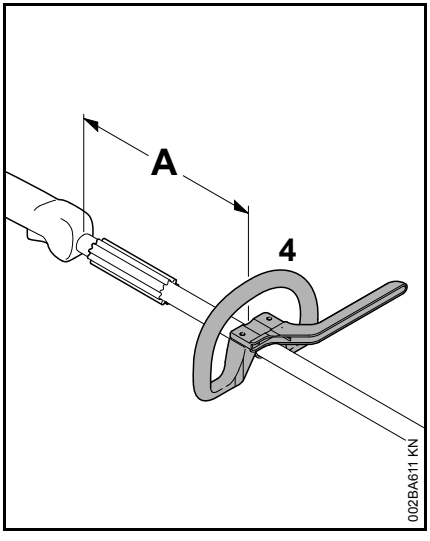

The loop handle can be adjusted to suit the height and reach of the operator and the application by changing distance (A).

Recommendation: distance (A): about 15 cm (5.9 in)

- Slide the handle to the required position.
- Line up the loop handle (4).
- Tighten down the screws until the loop handle can no longer be rotated on the drive tube. If no barrier bar is fitted – lock the nuts if necessary.

Fitting the Carrying Ring

Polymer Version

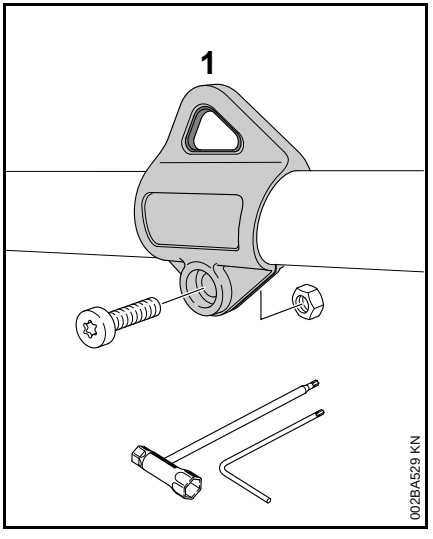

For position of carrying ring see "Main Parts".

- Push the carrying ring (1) over the drive tube.
- Insert the M5 nut in the hex recess in the carrying ring.
- Fit the M5x14 screw.
- Line up the carrying ring.
- Tighten down the screw firmly.

Metal Version

The carrying ring comes standard with the machine or is available as a special accessory.

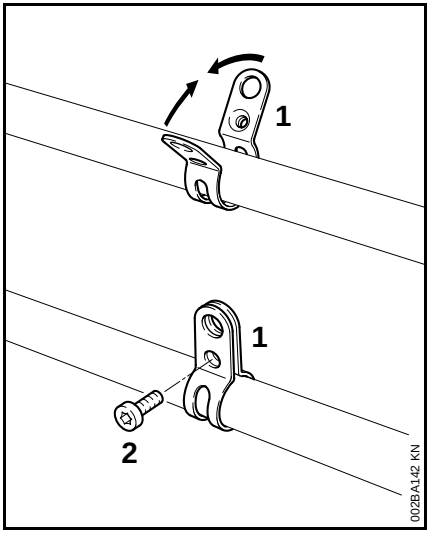

For position of carrying ring see "Main Parts".

- Place the clamp (1) against the drive tube **with the tapped hole on the left** (viewed from engine).
- Squeeze the two ends of the clamp together and hold in that position.
- Insert the M6x14 screw (2).
- Line up the carrying ring.
- Tighten down the screw firmly.

Mounting the Deflector

Use the right deflector

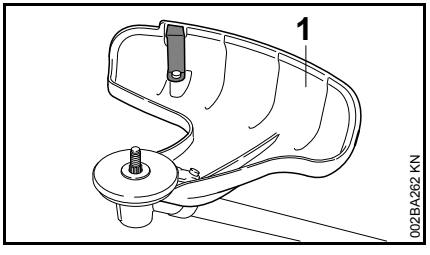

WARNING

Deflector (1) is approved for mowing heads only and must therefore be mounted before fitting a mowing head

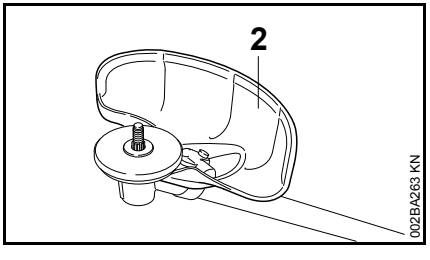

WARNING

Deflector (2) is approved for grass cutting blades only and must therefore be mounted before fitting a grass cutting blade.

Mounting the Deflector

Deflectors (1) and (2) are both mounted to the gearbox in the same way.

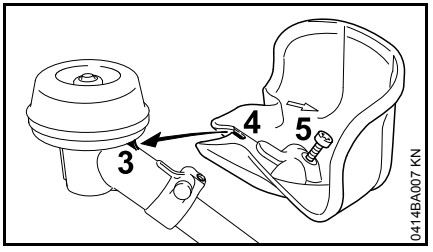

- Position the deflector against the gearbox so that the lug (3) engages the recess (4) in the deflector.
- Insert the screw (5) and tighten it down firmly.

Mounting the Cutting Attachment

Placing power tool on the ground

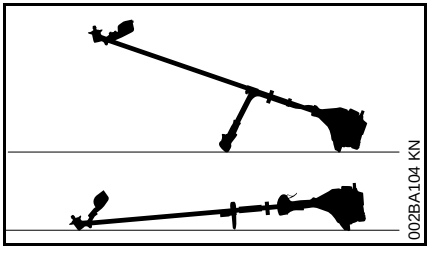

- Shut off the engine.
- Lay your power tool on its back so that the cutting attachment mounting face is pointing up.

Fitting the Thrust Plate

The machine comes standard with the thrust plate.

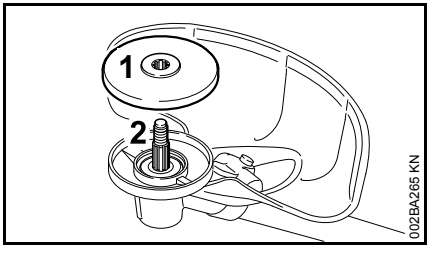

- Slip the thrust plate (1) over the shaft (2).

NOTICE

The thrust plate on the gearbox is necessary for mounting cutting tools.

Mounting Hardware for Cutting Attachments

The mounting hardware supplied depends on the cutting attachment that comes as original equipment with the new machine.

If mounting hardware is not packed with machine

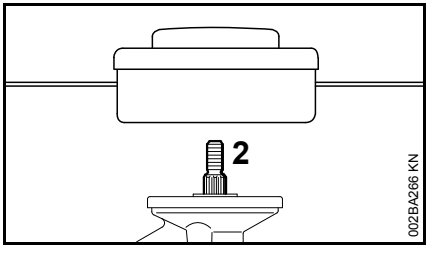

Only mowing heads may be used which mount directly to the shaft (2).

If mounting hardware is packed with machine

Mowing heads and metal cutting tools may be mounted.

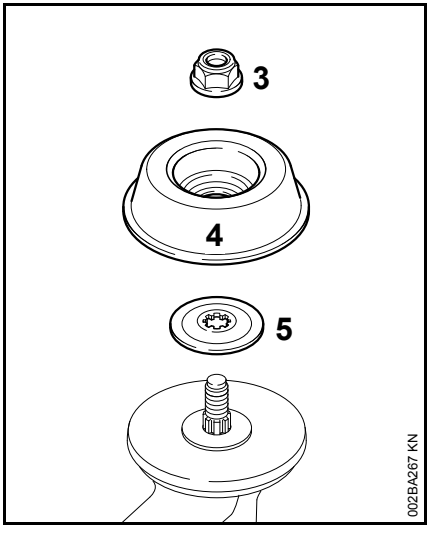

The nut (3), rider plate (4) and thrust washer (5) are required to secure some mowing heads.

These parts are included in a kit supplied with the machine and are also available as special accessories.

Block the shaft.

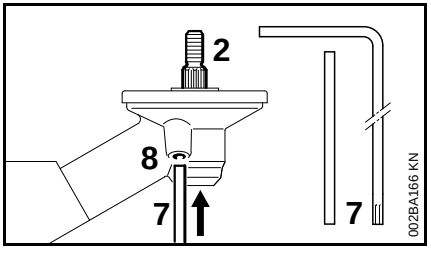

The output shaft (2) must be blocked with the stop pin (7) or screwdriver (7) to mount or remove cutting tools. These parts come standard with the machine or are available as special accessories.

- Insert the stop pin (7) or offset screwdriver (7) in the hole (8) in the gearbox as far as stop – and apply slight pressure.
- Rotate shaft or cutting attachment until the stop pin slips into position and blocks the shaft.

Mounting the Cutting Attachment

WARNING

Use a deflector that matches the cutting attachment – see "Mounting the Deflector".

Fitting Mowing Head with Screw Mounting

Keep the instruction leaflet for the mowing head in a safe place.

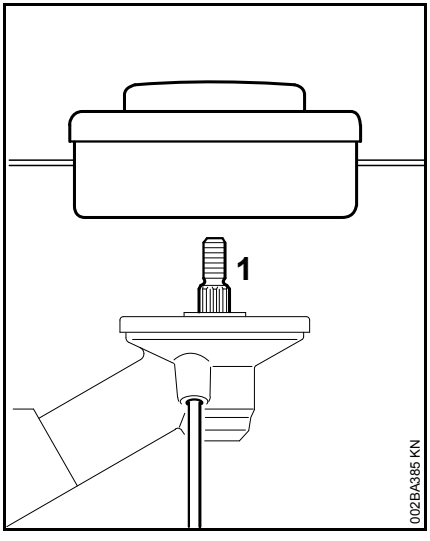

- Screw the mowing head counterclockwise on to the shaft (1) as far as stop.
- Block the shaft.
- Tighten down the mowing head firmly.

NOTICE

Remove the tool used to block the shaft.

Removing the Mowing Head

- Block the shaft.
- Unscrew the mowing head clockwise.

Mounting Metal Cutting Attachment

Keep the leaflet and packaging of the metal cutting tool in a safe place.

WARNING

Wear protective gloves to reduce the risk of direct contact with the sharp cutting edges.

Mount only metal cutting attachments.

Check direction of rotation of cutting attachment

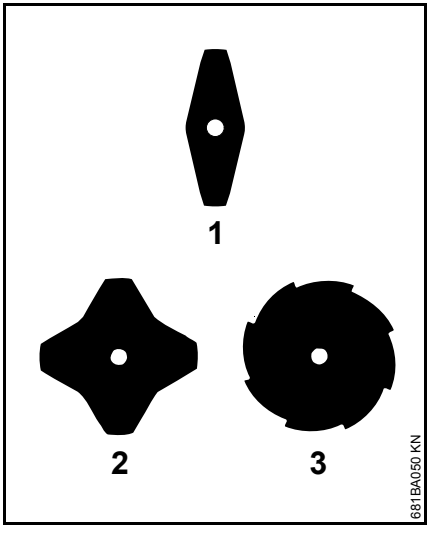

The cutting edges of the grass cutting blades (1) and (2) may point in either direction – these cutting attachments must be turned over regularly to reduce one-sided wear.

Cutting edges of grass cutting blade (3) must point clockwise.

WARNING

Direction of rotation is indicated by an arrow on the inside of the deflector.

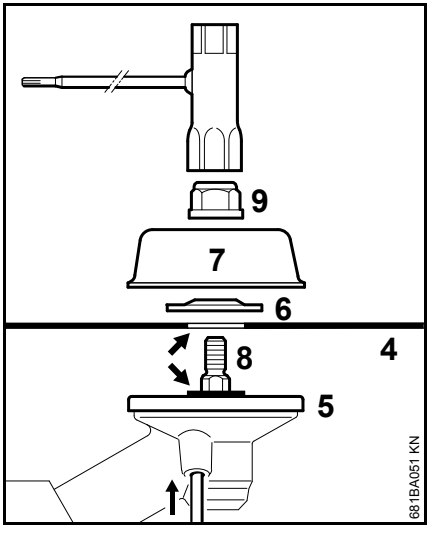

- Place the cutting attachment (4) on the thrust plate (5).

WARNING

Collar (see arrow) must engage the cutting attachment's mounting hole.

Securing the cutting attachment

- Fit the thrust washer (6) – convex side must face up.
- Fit the rider plate (7).
- Block the shaft (8).
- Screw the mounting nut (9) on to the shaft counterclockwise and tighten it down firmly.

WARNING

If the mounting nut has become too loose, fit a new one.

NOTICE

Remove the tool used to block the shaft.

Removing the Metal Cutting Attachment

WARNING

Wear protective gloves to reduce the risk of direct contact with the sharp cutting edges.

- Block the shaft.
- Unscrew the mounting nut clockwise.
- Remove cutting attachment and its mounting hardware from the gearbox – but **do not** remove the thrust plate (5).

Fuel

Your engine requires a mixture of gasoline and engine oil.

WARNING

For health reasons, avoid direct skin contact with gasoline and avoid inhaling gasoline vapor.

STIHL MotoMix

STIHL recommends the use of STIHL MotoMix. This ready-to-use fuel mix contains no benzol or lead, has a high octane rating and ensures that you always use the right mix ratio.

STIHL MotoMix uses STIHL HP Ultra two-stroke engine oil for an extra long engine life.

MotoMix is not available in all markets.

Mixing Fuel

NOTICE

Unsuitable fuels or lubricants or mix ratios other than those specified may result in serious damage to the engine. Poor quality gasoline or engine oil may damage the engine, sealing rings, hoses and the fuel tank.

Gasoline

Use only high-quality **brand-name** gasoline with a minimum octane rating of 90 – leaded or unleaded.

Gasoline with an ethanol content of more than 10% can cause running problems in engines with a manually adjustable carburetor and should not be used in such engines.

Engines equipped with M-Tronic deliver full power when run on gasoline with an ethanol content of up to 25% (E25).

Engine Oil

If you mix the fuel yourself, use only STIHL two-stroke engine oil or another high-performance engine oil in accordance with JASO FB, JASO FC, JASO FD, ISO-L-EGB, ISO-L-EGC or ISO-L-EGD.

STIHL specifies STIHL HP Ultra two-stroke engine oil or an equivalent high-performance engine oil in order to maintain emission limits over the machine's service life.

Mix Ratio

STIHL 50:1 two-stroke engine oil: 50 parts gasoline to 1 part oil

Examples

Gasoline	STIHL engine oil 50:1	
Liters	Liters	(ml)
1	0.02	(20)
5	0.10	(100)
10	0.20	(200)
15	0.30	(300)
20	0.40	(400)
25	0.50	(500)

- Use a canister approved for storing fuel. Pour oil into canister first, then add gasoline and mix thoroughly.

Storing Fuel

Store fuel only in approved safety-type fuel canisters in a dry, cool and safe location protected from light and the sun.

Fuel mix ages – only mix sufficient fuel for a few weeks work. Do not store fuel mix for longer than 30 days. Exposure to light, the sun, low or high temperatures can quickly make the fuel mix unusable.

STIHL MotoMix may be stored for up to 2 years without any problems.

- Thoroughly shake the mixture in the canister before fueling your machine.

WARNING

Pressure may build up in the canister – open it carefully.

- Clean the fuel tank and canister from time to time.

Dispose of remaining fuel and cleaning fluid properly in accordance with local regulations and environmental requirements.

Fueling

Preparations

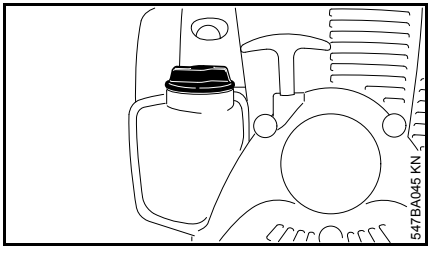

- Before fueling, clean the filler cap and the area around it to ensure that no dirt falls into the tank.
- Position the machine so that the filler cap is facing up.

Opening the Tank Cap

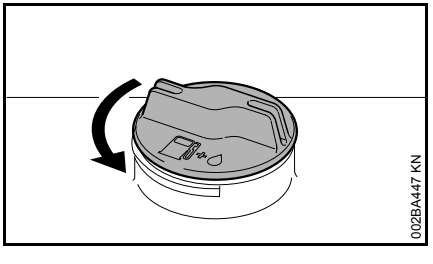

- Turn the cap counterclockwise until it can be removed from the tank opening.
- Remove the tank cap.

Filling Up with Fuel

Take care not to spill fuel while fueling and do not overfill the tank.

STIHL recommends you use the STIHL filler nozzle for fuel (special accessory).

- Fill up with fuel.

Closing the Tank Cap

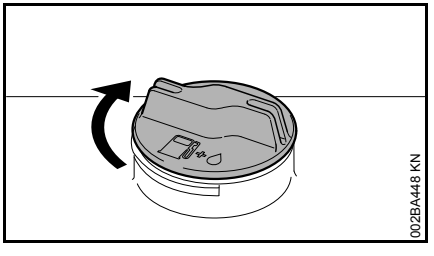

- Place the cap in the opening.
- Turn the cap clockwise as far as stop and tighten it down as firmly as possible by hand.

Fitting the Harness

The type and style of the harness depend on the market.

The use of the harness is described in the chapter on "Approved Combinations of Cutting Attachment, Deflector, Handle and Harness".

Shoulder strap

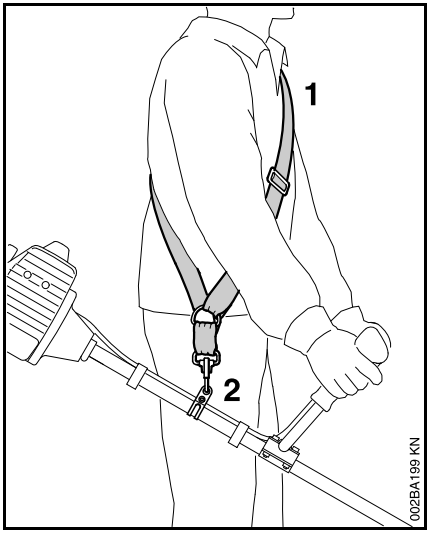

- Put on the shoulder strap (1).
- Adjust the length of the strap so that the carabiner (2) is about a hand's width below your right hip.
- Balance the machine.

Full Harness

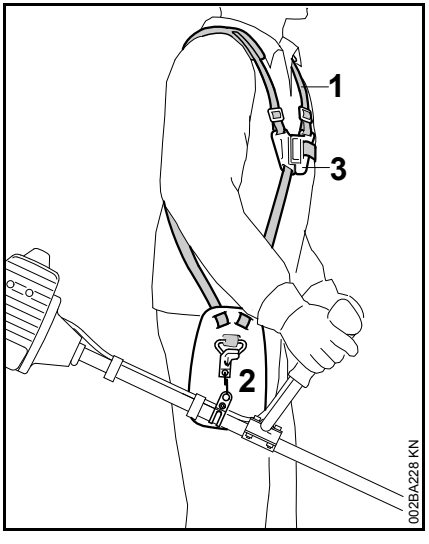

- Put on the harness (1) and close the locking plate (3).
- Adjust the length of the strap – with the machine attached, the carabiner (2) must be about a hand's width below your right hip.
- Balance the machine – see "Balancing the Machine".

Balancing the Machine

The type and style of the harness and carabiner (spring hook) depend on the market.

The carrying ring is integrated in the control handle on loop-handled units– see "Main Parts". Loop-handled units do not need to be balanced.

Attaching the unit to the harness

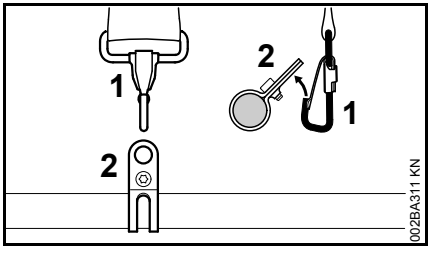

- Attach the carabiner (1) to the carrying ring (2) on the drive tube.

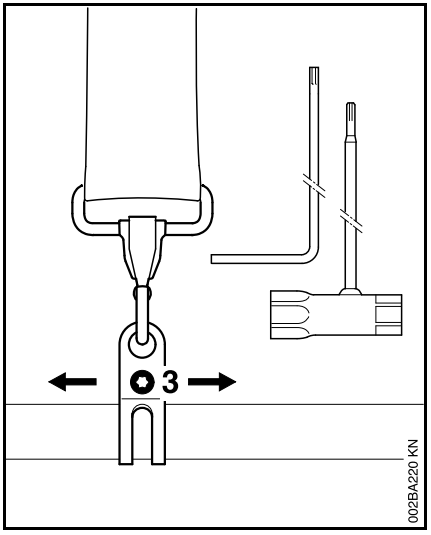

- Loosen the screw (3).

Floating position

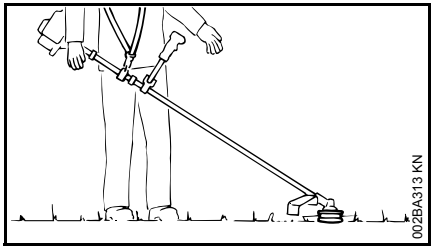

- Mowing heads and grass cutting blades should just touch the ground.

Proceed as follows to adjust the floating position:

- Move the carrying ring up or down the drive tube – tighten the screw moderately – let the unit go and wait until is its balanced – then check the floating position.

When the correct floating position has been reached:

- Tighten down the screw on the carrying ring firmly.

Detaching the unit from the harness

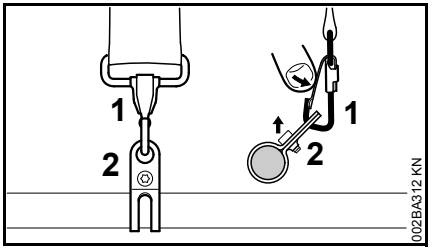

- Press down the bar on the carabiner (1) and pull the carrying ring (2) out of the carabiner.

Starting / Stopping the Engine

Controls

Version with Bike Handle

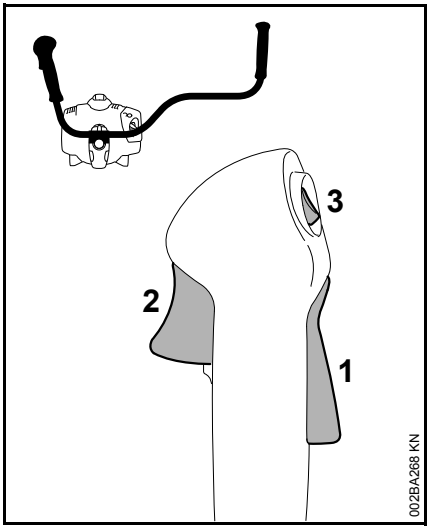

1 Throttle trigger lockout
2 Throttle trigger
3 Stop switch with **Run** and **0** = Stop positions.

Version with Loop Handle

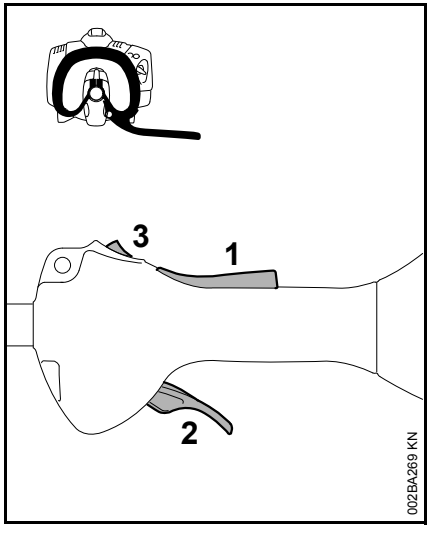

1 Throttle trigger lockout
2 Throttle trigger
3 Stop switch with **Run** and **0** = Stop positions.

Function of stop switch and ignition system

The stop switch is normally in the Run position, i.e. when it is **not** depressed: The ignition is switched on – the engine is ready to start. If the stop switch is moved to the **0** position, the ignition is switched off. The ignition is switched on again automatically after the engine stops.

Starting the Engine

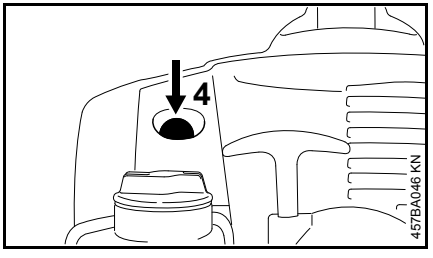

- Press the manual fuel pump bulb (4) at least five times – even if the bulb is filled with fuel.

Cold engine (cold start)

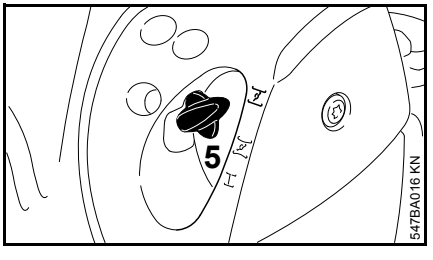

- Press in the choke lever (5) and turn it to ⌶ at the same time.

Warm engine (warm start)

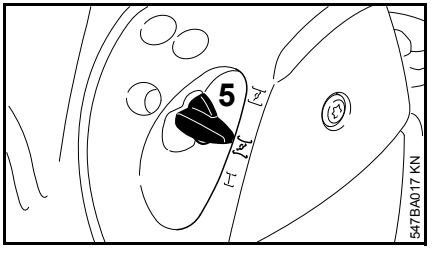

- Press in the choke lever (5) and turn it to ⌶ at the same time.

Also use this setting if the engine has been running but is still cold.

Cranking

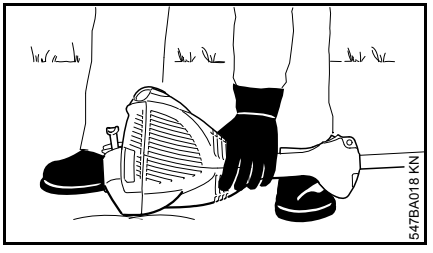

- Place the unit on the ground: It must rest securely on the engine support and the deflector.
- If fitted: Remove the transport guard from the cutting attachment.

To reduce the risk of accidents, check that the cutting attachment is not touching the ground of any other obstacles.

- Make sure you have a firm footing, either standing, stooping or kneeling.
- Hold the unit **firmly** on the ground with your left hand and press down – do not touch the throttle trigger, lockout lever or stop switch.

NOTICE

Do not stand or kneel on the drive tube.

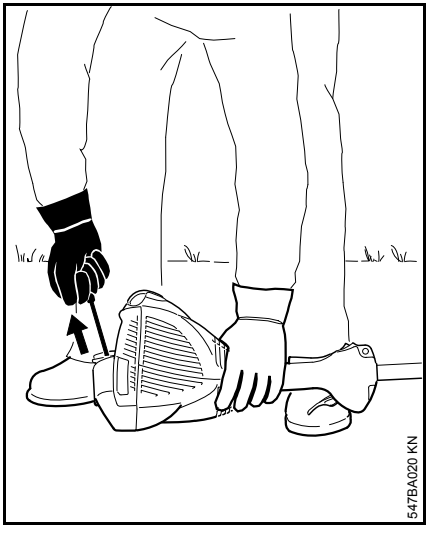

- Hold the starter grip with your right hand.

Version without ErgoStart

- Pull the starter grip slowly until you feel it engage and then give it a brisk strong pull.

Version with ErgoStart

- Pull the starter grip steadily.

NOTICE

Do not pull out the starter rope all the way – **it might otherwise break**.

- Do not let the starter grip snap back. Guide it slowly back into the housing so that the starter rope can rewind properly.
- Continue cranking until the engine runs.

As soon as the engine runs

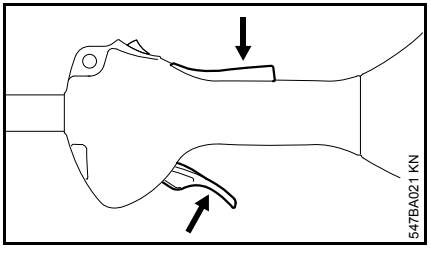

- Press down the throttle trigger lockout and open the throttle – the choke lever moves to the run position I. After a cold start, warm up the engine by opening the throttle several times.

WARNING

Make sure the carburetor is correctly adjusted. The cutting attachment must not rotate when the engine is idling.

Your machine is now ready for operation.

Stopping the Engine

- Move the stop switch in the direction of 0 – the engine stops – release the stop switch – it springs back to the run position.

Other Hints on Starting

Engine stalls in cold start position or under acceleration

- Move the choke knob to and continue cranking until the engine runs.

Engine does not start in warm start position

- Move the choke knob to and continue cranking until the engine runs.

If the engine does not start

- Check that all settings are correct.
- Check that there is fuel in the tank and refuel if necessary.
- Check that the spark plug boot is properly connected.
- Repeat the starting procedure.

Engine is flooded

- Move the choke knob to I and continue cranking until the engine runs.

Fuel tank run until completely dry

- After refueling, press the manual fuel pump bulb at least five times – even if the bulb is filled with fuel.
- Set the choke lever to suit the engine temperature.
- Now start the engine.

Transporting the Unit

Using transport guard

The type of transport guard depends on the metal cutting attachment supplied with the machine. Transport guards are available as special accessories.

230 mm Grass Cutting Blades

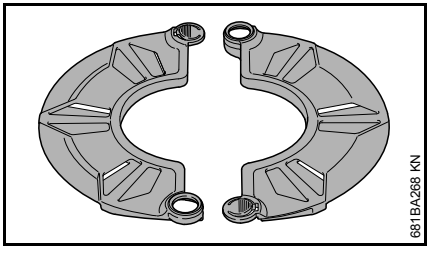

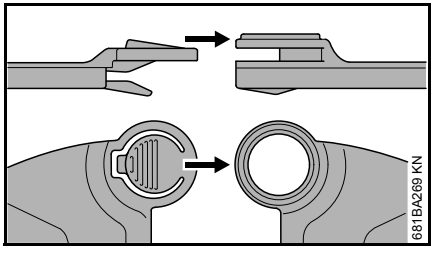

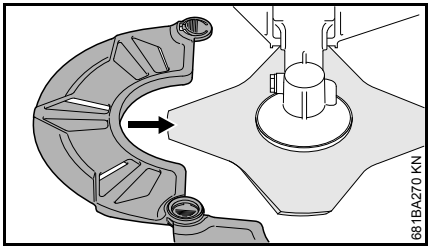

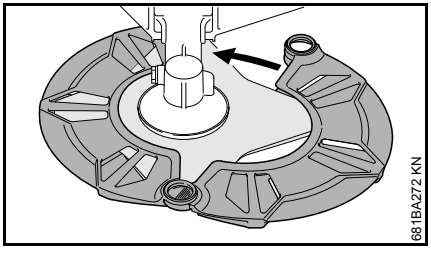

Operating Instructions

During break-in period

A factory-new machine should not be run at high revs (full throttle off load) for the first three tank fillings. This avoids unnecessary high loads during the break-in period. As all moving parts have to bed in during the break-in period, the frictional resistances in the engine are greater during this period. The engine develops its maximum power after about 5 to 15 tank fillings.

During Operation

After a long period of full throttle operation, allow the engine to run for a short while at idle speed so that engine heat can be dissipated by the flow of cooling air. This protects engine-mounted components (ignition, carburetor) from thermal overload.

After Finishing Work

Storing for a short period: Wait for the engine to cool down. Empty the fuel tank and keep the machine in a dry place, well away from sources of ignition, until you need it again. For longer out-of-service periods – see "Storing the Machine".

Cleaning the Air Filter

If there is a noticeable loss of engine power

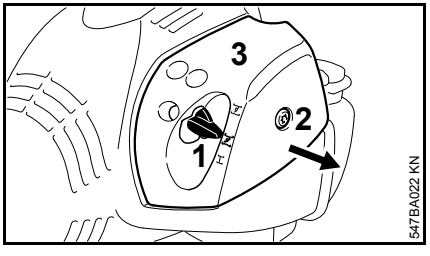

- Move the choke lever (1) to ⌶.
- Turn the screw (2) in the filter cover (3) counterclockwise until the cover is loose.
- Ease the filter cover (3) over the choke lever and lift it away.
- Clean away loose dirt from around the filter.

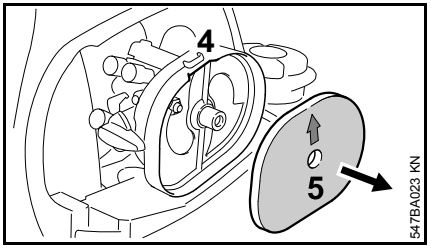

- Reach into the recess (4) in the filter housing and take out the felt filter (5).
- Fit a new felt filter element (5). As a temporary measure you can knock it out on the palm of your hand or blow it out with compressed air. Do not wash.

NOTICE

Replace damaged parts.

- Fit the felt filter (5) in the filter housing, make sure it is properly seated – the arrow points to the recess.
- Move the choke lever (1) to ⌶.
- Fit the filter cover in position, making sure the screw is square. Tighten down the screw.

Adjusting the Carburetor

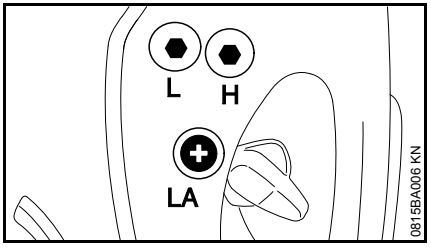

The carburetor has been set at the factory to provide an optimum fuel-air mixture under most operating conditions.

Adjusting Idle Speed

Engine stops while idling

- Warm up the engine for about 3 minutes.
- Turn the idle speed screw (LA) slowly clockwise until the engine runs smoothly – the cutting attachment must not run.

Cutting attachment runs when engine is idling

- Turn the idle speed screw (LA) counterclockwise until the cutting attachment stops moving and then rotate the screw another 1/2 to 3/4 turn in the same direction.

WARNING

If the cutting attachment continues to run when the engine is idling, have your machine checked and repaired by your servicing dealer.

Spark Plug

- If the engine is down on power, difficult to start or runs poorly at idle speed, first check the spark plug.
- Fit a new spark plug after about 100 operating hours – or sooner if the electrodes are badly eroded. Install only suppressed spark plugs of the type approved by STIHL – see "Specifications".

Removing the Spark Plug

- Shut off the engine.

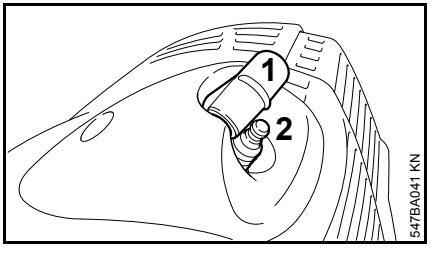

- Remove the spark plug boot (1).
- Unscrew the spark plug (2).

Checking the Spark Plug

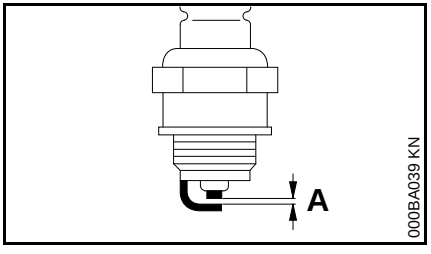

- Clean dirty spark plug.
- Check electrode gap (A) and readjust if necessary – see "Specifications".
- Rectify the problems which have caused fouling of the spark plug.

Possible causes are:

– Too much oil in fuel mix.
– Dirty air filter.
– Unfavorable running conditions.

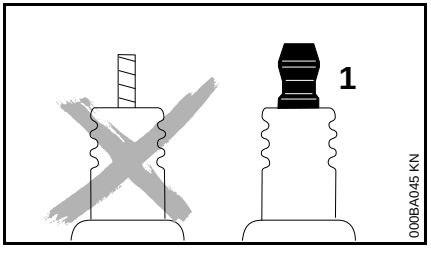

WARNING

Arcing may occur if the adapter nut (1) is loose or missing. Working in an easily combustible or explosive atmosphere may cause a fire or an explosion. This can result result in serious injuries or damage to property.

- Use resistor type spark plugs with a properly tightened adapter nut.

Installing the Spark Plug

- Screw the spark plug into the cylinder.
- Press the boot firmly onto the spark plug.

Engine Running Behavior

If engine running behavior is unsatisfactory even though the air filter is clean and the carburetor is properly adjusted, the cause may be the muffler.

Have the muffler checked for contamination (carbonization) by your servicing dealer.

STIHL recommends that you have servicing and repair work carried out exclusively by an authorized STIHL servicing dealer.

Storing the Machine

For periods of about 3 months or longer

- Drain and clean the fuel tank in a well ventilated area.
- Dispose of fuel properly in accordance with local environmental requirements.
- Run the engine until the carburetor is dry – this helps prevent the carburetor diaphragms sticking together.
- Remove, clean and inspect the cutting attachment. Coat metal cutting attachments with corrosion inhibitor.
- Thoroughly clean the machine – pay special attention to the cylinder fins and air filter.
- Store the machine in a dry and secure location – out of the reach of children and other unauthorized persons.

Sharpening Metal Cutting Blades

- Use a sharpening file (special accessory) to sharpen dull cutting attachments. In case of more serious wear or nicks: Resharpen with a grinder or have the work done by a dealer – STIHL recommends a STIHL servicing dealer.
- Sharpen frequently, take away as little metal as possible – two or three strokes of the file are usually enough.

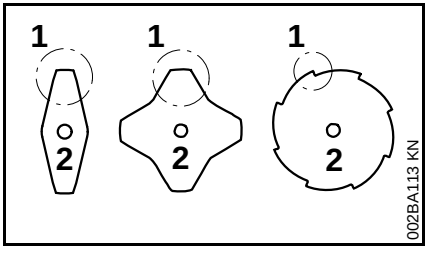

- Resharpen the teeth (1) uniformly – do not alter the contour of the parent blade (2) in any way.

See cutting attachment packaging for additional sharpening instructions. Keep the packaging for future reference.

Balancing

- After resharpening about 5 times, check the cutting attachment for out-of-balance on a STIHL balancer (special accessory) or have it checked by a dealer and re-balanced as necessary – STIHL recommends a STIHL servicing dealer.

Maintaining the Mowing Head

Placing power tool on the ground

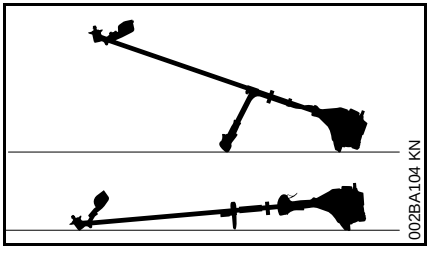

- Shut off the engine.
- Lay your power tool on its back so that the cutting attachment mounting face is pointing up.

Replacing Nylon Line

Always check the mowing head for signs of wear before replacing the nylon line.

WARNING

If there are signs of serious wear, replace the complete mowing head.

The nylon mowing line is referred to as "nylon line" or "line" in the following.

The mowing head is supplied with illustrated instructions for replacing the nylon line. Keep the instructions for the mowing head in a safe place.

- If necessary, remove the mowing head.

Adjusting Nylon Line

STIHL SuperCut

Fresh line is advanced automatically if the remaining line is **at least 6 cm (2 1/2 in)** long. The blade on the deflector trims overlong lines to the correct length.

STIHL AutoCut

- With the engine running, hold the rotating mowing head above the grass surface.
- Tap it on the ground once – fresh line is advanced and the blade on the deflector trims it to the right length.

Fresh line is advanced every time the mowing head is tapped on the ground. For this reason observe the mowing head's cutting performance during operation. If the mowing head is tapped on the ground too often, the line limiting blade will unnecessarily cut off unused lengths of nylon line.

Line feed operates only if both lines are still at least **2.5 cm (1 in)** long.

STIHL TrimCut

WARNING

To reduce the risk of injury, always shut off the engine before adjusting the nylon line by hand.

- Pull the spool up – rotate it about 1/6 turn counterclockwise until it engages – and allow it to spring back.
- Pull ends of the lines outward.

Repeat the above procedure as necessary until both lines reach the limiter blade on the deflector.

Rotating the spool from one stop to the next advances about **4 cm (1 1/2 in)** of fresh line.

Replacing Nylon Line

STIHL PolyCut

Precut lengths of nylon line can be fitted to the PolyCut in place of the cutting blades.

STIHL DuroCut, STIHL PolyCut

WARNING

To reduce the risk of injury, always shut off the engine before refilling the mowing head.

- Fit precut lengths of nylon line in the mowing head as described in the instructions supplied.

Replacing Cutting Blades

STIHL PolyCut

Always check the mowing head for signs of wear before installing new cutting blades.

WARNING

If there are signs of serious wear, replace the complete mowing head.

The thermoplastic cutting blades are referred to as "blades" in the following.

The mowing head is supplied with illustrated instructions for replacing the blades. Keep the instructions for the mowing head in a safe place.

WARNING

To reduce the risk of injury, always shut off the engine before installing the blades.

- Remove the mowing head.
- Replace blades as shown in the illustrated instructions.
- Mount the mowing head on the machine.

Maintenance and Care

The following intervals apply to normal operating conditions only. If your daily working time is longer or operating conditions are difficult (very dusty work area, etc.), shorten the specified intervals accordingly.		before starting work	after finishing work or daily	after each refueling stop	weekly	monthly	every 12 months	if problem	if damaged	as required
Complete machine	Visual inspection (condition, leaks)	X		X						
	Clean		X							
	Replace any damaged parts	X							X	
Control handle	Check operation	X		X						
Air filter	Visual inspection					X		X		
	Clean							X		X
	Replace								X	
Manual fuel pump (if fitted)	Check	X								
	Have repaired by servicing dealer[1)]								X	
Pickup body in fuel tank	Check							X		
	Replace						X		X	X
Fuel tank	Clean							X		X
Carburetor	Check idle adjustment – the cutting attachment must not run	X		X						
	Adjust idle speed									X
Spark plug	Readjust electrode gap							X		
	Replace after every 100 operating hours									
Cooling inlets	Visual inspection		X							
	Clean									X
All accessible screws and nuts (not adjusting screws)	Retighten									X

The following intervals apply to normal operating conditions only. If your daily working time is longer or operating conditions are difficult (very dusty work area, etc.), shorten the specified intervals accordingly.		before starting work	after finishing work or daily	after each refueling stop	weekly	monthly	every 12 months	if problem	if damaged	as required
Cutting attachment	Visual inspection	X		X						
	Replace								X	
	Check tightness	X		X						
Metal cutting attachment	Sharpen	X								X
Safety labels	Replace								X	

1) STIHL recommends an authorized STIHL servicing dealer.

Minimize Wear and Avoid Damage

Observing the instructions in this manual helps reduce the risk of unnecessary wear and damage to the power tool.

The power tool must be operated, maintained and stored with the due care and attention described in this owner's manual.

The user is responsible for all damage caused by non-observance of the safety precautions, operating and maintenance instructions in this manual. This includes in particular:

- Alterations or modifications to the product not approved by STIHL.
- Using tools or accessories which are neither approved or suitable for the product or are of a poor quality.
- Using the product for purposes for which it was not designed.
- Using the product for sports or competitive events.
- Consequential damage caused by continuing to use the product with defective components.

Maintenance Work

All the operations described in the "Maintenance Chart" must be performed on a regular basis. If these maintenance operations cannot be performed by the owner, they should be performed by a servicing dealer.

STIHL recommends that you have servicing and repair work carried out exclusively by an authorized STIHL servicing dealer. STIHL dealers are regularly given the opportunity to attend training courses and are supplied with the necessary technical information.

If these maintenance operations are not carried out as specified, the user assumes responsibility for any damage that may occur. Among other parts, this includes:

- Damage to the engine due to neglect or deficient maintenance (e.g. air and fuel filters), incorrect carburetor adjustment or inadequate cleaning of cooling air inlets (intake ports, cylinder fins).
- Corrosion and other consequential damage resulting from improper storage.
- Damage to the machine resulting from the use of poor quality replacement parts.

Parts Subject to Wear and Tear

Some parts of the power tool are subject to normal wear and tear even during regular operation in accordance with instructions and, depending on the type and duration of use, have to be replaced in good time. Among other parts, this includes:

- Cutting attachments (all types)
- Mounting hardware for cutting attachments (rider plate, nut, etc.)
- Deflectors for cutting attachments
- Clutch
- Filters (air, fuel)
- Rewind starter
- Spark plug

Main Parts

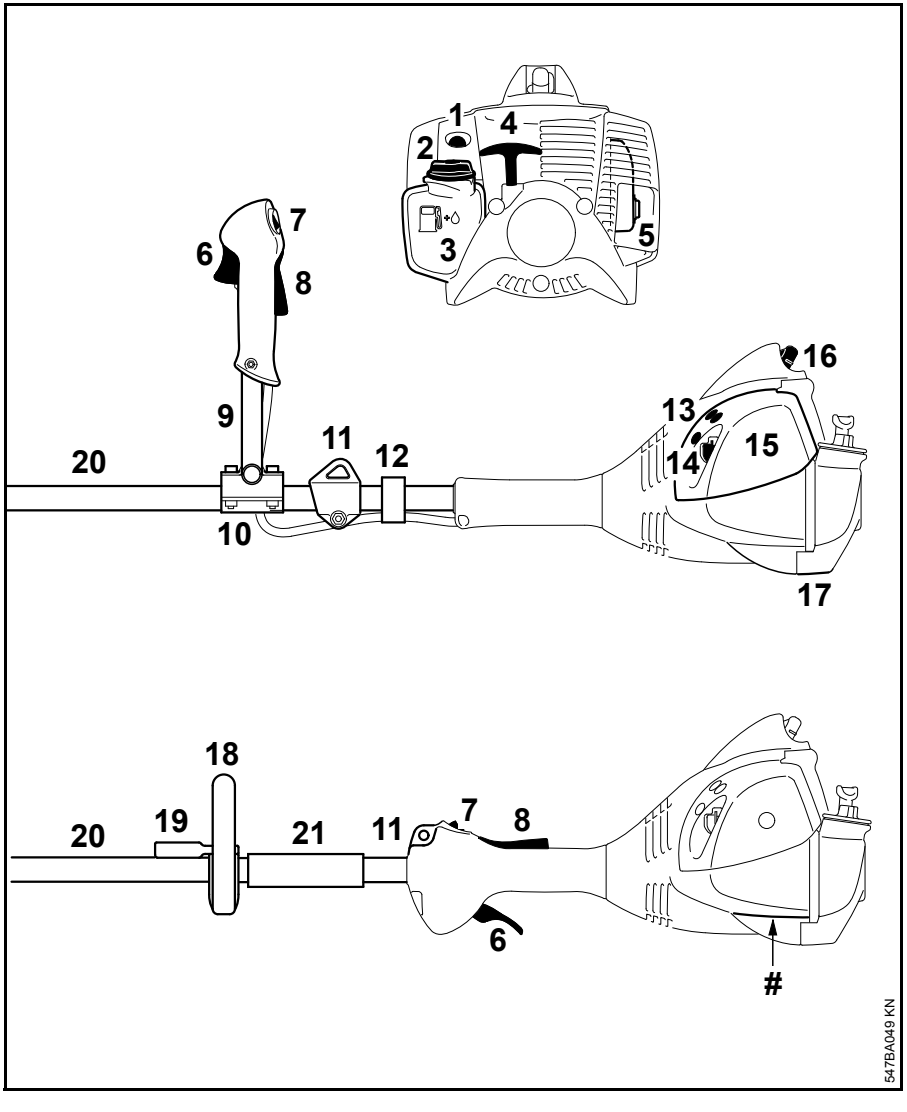

1 Manual fuel pump
2 Tank cap
3 Tank
4 Starter grip
5 Muffler
6 Throttle trigger
7 Stop switch
8 Throttle trigger lockout
9 Bike handle (handlebar)
10 Handle support
11 Carrying ring
12 Throttle cable retainer
13 Carburetor adjusting screws
14 Choke lever
15 Air filter cover
16 Spark plug boot
17 Machine support
18 Loop handle
19 Barrier bar (country specific)
20 Drive tube
21 Sleeve
Serial number

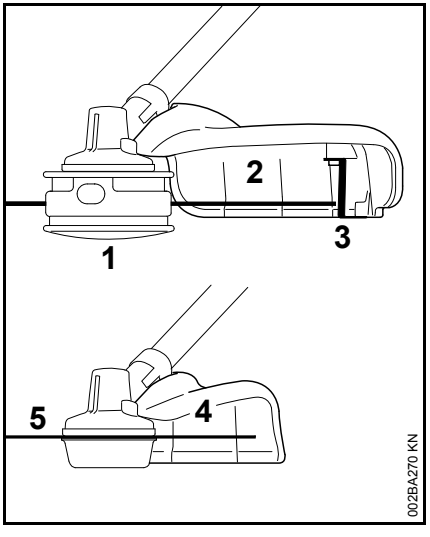

1 Mowing head
2 Deflector for mowing heads only
3 Blade
4 Deflector for grass cutting blades only
5 Grass cutting blade

Specifications

Engine

Single cylinder two-stroke engine

Displacement:	27.2 cc
Bore:	34 mm
Stroke:	30 mm
Engine power to ISO 8893:	0.8 kW (1.1 bhp) at 8,500 rpm
Idle speed:	2,800 rpm
Cut-off speed (rated):	10,000 rpm
Max. output shaft speed (cutting attachment):	8,600 rpm

Ignition System

Electronic magneto ignition

Spark plug (resistor type):	NGK CMR 6 H
Electrode gap:	0.5 mm

Fuel System

All position diaphragm carburetor with integral fuel pump

Fuel tank capacity:	340 cc (0.34 l)

Weight

Dry, without cutting attachment and deflector

FS 56:		5.1 kg
FS 56 R:		4.7 kg
FS 56 C	with ErgoStart:	5.2 kg
FS 56 RC:	with ErgoStart:	4.8 kg

Noise and Vibration Data

Noise and vibration data measurements include idling and rated maximum speed with the same duration of exposure.

For further details on compliance with Vibration Directive 2002/44/EC see www.stihl.com/vib/

Sound pressure level L_{peq} to ISO 22868

FS 56, FS 56 C

with mowing head:	93 dB(A)
with metal tool:	94 dB(A)

FS 56 R, FS 56 RC

with mowing head:	93 dB(A)
with metal tool:	94 dB(A)

Sound power level L_w to ISO 22868

FS 56, FS 56 C, FS 56 R, FS 56 RC

with mowing head:	107 dB(A)
with metal tool:	107 dB(A)

Vibration measurement $a_{hv,eq}$ to ISO 22867

FS 56, FS 56 C

	Handle, left	Handle, right
with mowing head:	4.7 m/s^2	3.8 m/s^2
with metal tool:	5.5 m/s^2	5.5 m/s^2

FS 56 R

	Handle, left	Handle, right
with mowing head:	6.5 m/s^2	7.5 m/s^2
with metal tool:	6.6 m/s^2	6.6 m/s^2

FS 56 RC

	Handle, left	Handle, right
with mowing head:	6.5 m/s^2	7.5 m/s^2
with metal tool:	6.6 m/s^2	6.6 m/s^2

The K-factor in accordance with Directive 2006/42/EC is 2.0 dB(A) for the sound pressure level and sound power level; the K-factor in accordance with Directive 2006/42/EC is 2.0 m/s^2 for the vibration level.

REACH

REACH is an EC regulation and stands for the Registration, Evaluation, Authorisation and Restriction of Chemical substances.

For information on compliance with the REACH regulation (EC) No. 1907/2006 see www.stihl.com/reach.

Exhaust Emissions

The CO_2value measured in the EU type approval procedure is specified at www.stihl.com/co2.

The measured CO_2value was determined on a representative engine in accordance with a standardized test procedure under laboratory conditions and does not represent either an explicit or implied guarantee of the performance of a specific engine.

The applicable exhaust emission requirements are fulfilled by the intended usage and maintenance described in this instruction manual. The type approval expires if the engine is modified in any way.

Maintenance and Repairs

Users of this machine may only carry out the maintenance and service work described in this user manual. All other repairs must be carried out by a servicing dealer.

STIHL recommends that you have servicing and repair work carried out exclusively by an authorized STIHL servicing dealer. STIHL dealers are regularly given the opportunity to attend training courses and are supplied with the necessary technical information.

When repairing the machine, only use replacement parts which have been approved by STIHL for this power tool or are technically identical. Only use high-quality replacement parts in order to avoid the risk of accidents and damage to the machine.

STIHL recommends the use of original STIHL replacement parts.

Original STIHL parts can be identified by the STIHL part number, the STIHL logo and the STIHL parts symbol (the symbol may appear alone on small parts).

Disposal

Observe all country-specific waste disposal rules and regulations.

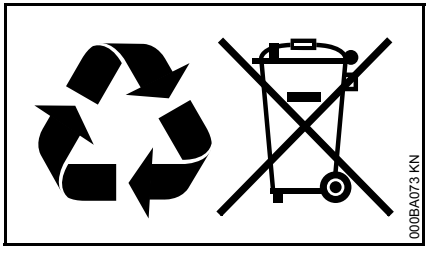

STIHL products must not be thrown in the garbage can. Take the product, accessories and packaging to an approved disposal site for environment-friendly recycling.

Contact your STIHL servicing dealer for the latest information on waste disposal.

EC Declaration of Conformity

ANDREAS STIHL AG & Co. KG
Badstr. 115
D-71336 Waiblingen

Germany

declares under our sole responsibility that

Designation:	Brushcutter
Make:	STIHL
Series:	FS 56
	FS 56 C
	FS 56 C-E
	FS 56 R
	FS 56 RC
	FS 56 RC-E
Serial identification number:	4144
Displacement:	27.2^3

conforms to the relevant provisions of Directives 2011/65/EU, 2006/42/EC, 2014/30/EU and 2000/14/EC and has been developed and manufactured in compliance with the following standards in the versions valid on the date of production:

EN ISO 11806-1, EN 55012, EN 61000-6-1

The measured and the guaranteed sound power level have been determined in accordance with Directive 2000/14/EC, Annex V, and standard ISO 10884.

Measured sound power level

107 dB(A)

Guaranteed sound power level

109 dB(A)

Technical documents deposited at:

ANDREAS STIHL AG & Co. KG
Produktzulassung (Product Licensing)

The year of manufacture and serial number are applied to the product.

Done at Waiblingen, 03.02.2020

ANDREAS STIHL AG & Co. KG

pp

Dr. Jürgen Hoffmann

Leiter Erzeugnisdaten, -vorschriften und Zulassung

CE

0458-547-0121-D

englisch

GB

www.stihl.com

0458-547-0121-D